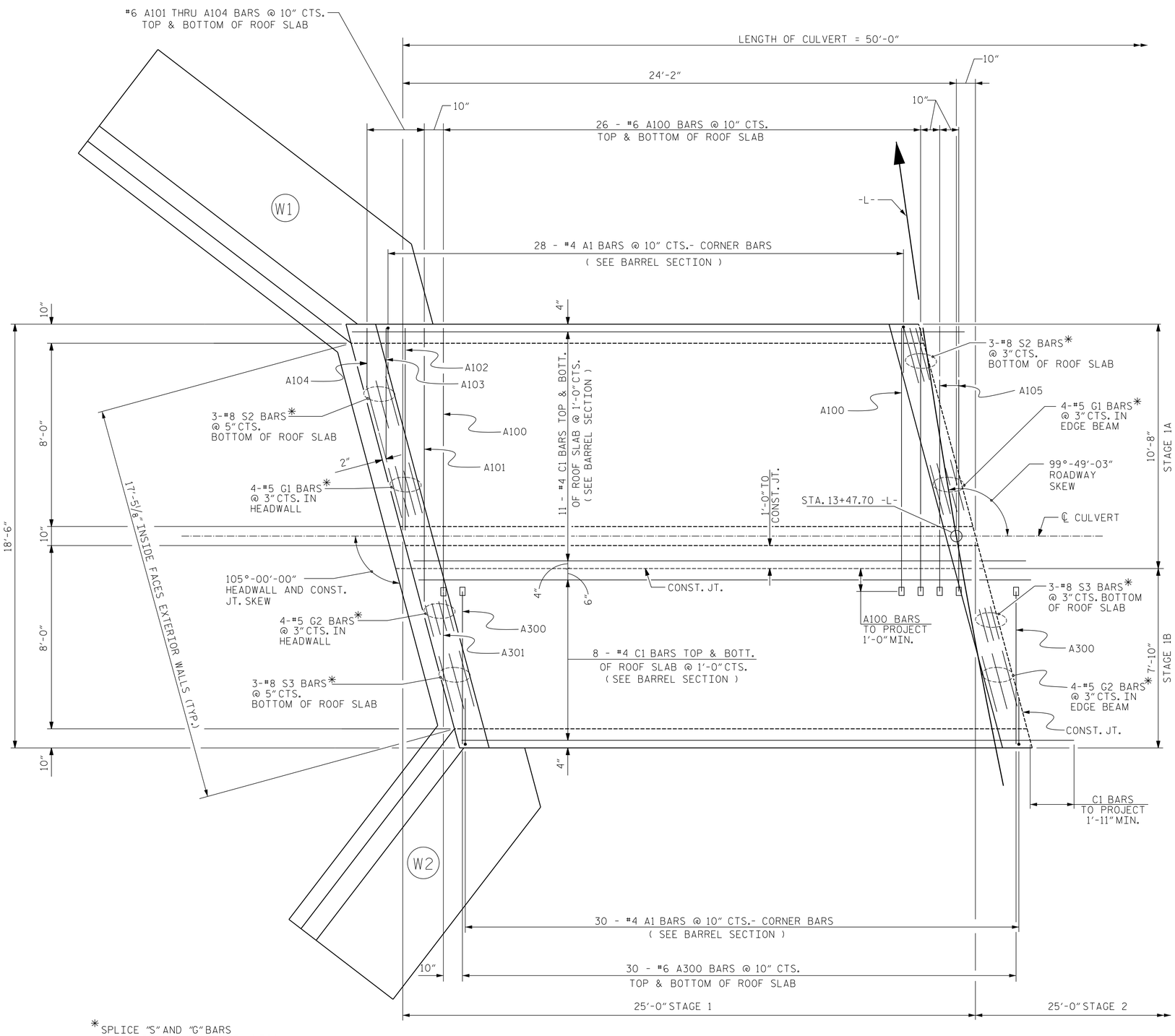

*SPLICE "S" AND "G" BARS AT CONST. JT. USING MECHANICAL COUPLERS.

ROOF SLAB PLAN

STAGE 1

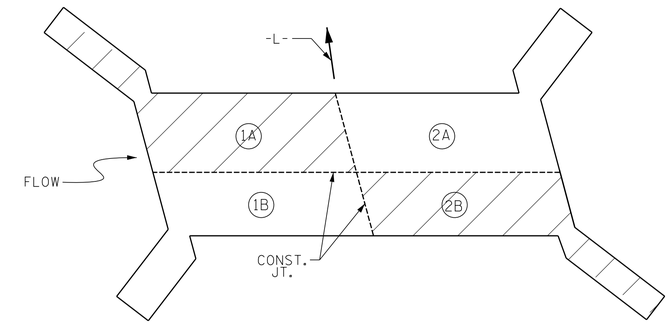

STAGING DIAGRM

CONSTRUCT THE CULVERT IN THE FOLLOWING SEQUENCE:
1A, 1B, 2A, AND 2B.
SHIFT TRAFFIC BETWEEN 1B AND 2A.

DOCUMENT NOT CONSIDERED FINAL UNLESS ALL SIGNATURES COMPLETED

NORTH CAROLINA PROFESSIONAL SEAL 20777 ENGINEER HARDY L. WILLIS

DocuSigned by: HardyWillis CC287FCF0223461... 4/28/2017

V&M Vaughn & Melton Consulting Engineers
Asheville, North Carolina 828-253-2796
Tri-Cities, TN 423-467-8401
Knoxville, TN 865-546-5800
Spartanburg, SC 864-574-4775
Charleston, SC 843-974-5650
Middlesboro, KY 606-248-6600
Atlanta, GA 770-627-3509
Charlotte, NC 704-357-0488
Boone, NC 828-355-9933
Copyright © 2006 Vaughn & Melton, Inc. All Rights Reserved

PROJECT NO. 17BP.14.R.142
POLK COUNTY
STATION: 13+47.70 -L-

SHEET 3 OF 10

STATE OF NORTH CAROLINA
DEPARTMENT OF TRANSPORTATION
RALEIGH

DOUBLE 8 FT. X 8 FT. CONCRETE BOX CULVERT 105° SKEW
STAGE 1

DRAWN BY: RWW DATE: 3/2015
CHECKED BY: HLW DATE: 3/2015
DES. EGR. OF RECORD: RTS DATE: 3/2015

REVISIONS						SHEET NO.
NO.	BY:	DATE:	NO.	BY:	DATE:	C-3
1			3			TOTAL SHEETS
2			4			10