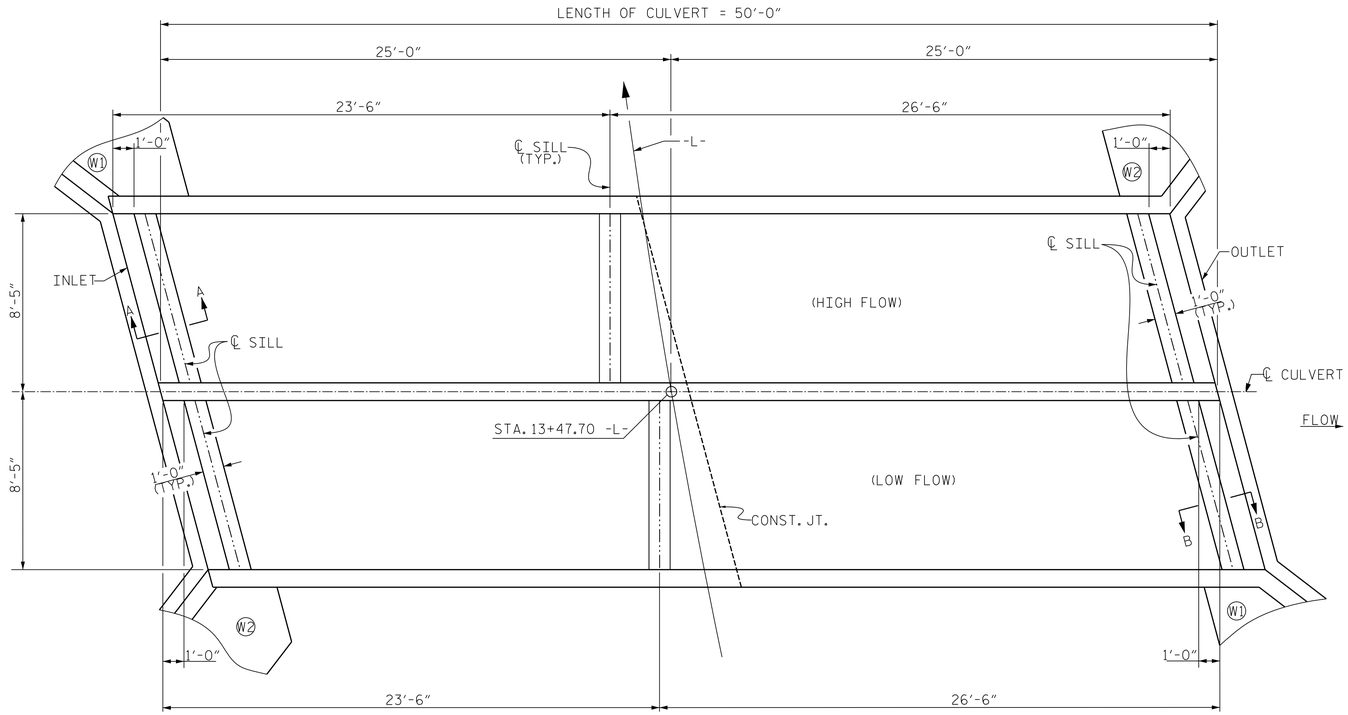

CULVERT SILL LAYOUT

NOTES

NATIVE MATERIAL CONSISTS OF MATERIAL THAT IS EXCAVATED FROM THE STREAM BED OF FLOODPLAIN AT THE PROJECT SITE DURING CULVERT CONSTRUCTION. ONLY MATERIAL THAT IS EXCAVATED FROM THE STREAM BED MAY BE USED TO LINE THE LOW FLOW CULVERT BARREL. RIP RAP MAY BE USED TO SUPPLEMENT THE NATIVE MATERIAL IN THE HIGH FLOW CULVERT BARREL. IF RIP RAP IS USED TO LINE THE HIGH FLOW CULVERT BARREL. NATIVE MATERIAL SHOULD BE PLACED ON TOP TO FILL VOIDS AND PROVIDE A FLAT SURFACE FOR ANIMAL PASSAGE. NATIVE MATERIAL IS SUBJECT TO APPROVAL BY THE ENGINEER AND MAY BE SUBJECT TO PERMIT CONDITIONS.

THE STOCKPILED NATIVE MATERIAL SHALL BE PLACED AS SHOWN IN THE "PLAN OF FLOOR SILL LAYOUT "SKETCH TO PROVIDE A 1'-0" DEPTH LOW FLOW CHANNEL BETWEEN LOW FLOW SILLS, AND SHALL BE PLACED TO A DEPTH OF 2'-0" BETWEEN HIGH FLOW SILLS.

SUPPLEMENTAL STONE OF SIMILAR CHARACTERISTIC OF THE NATIVE MATERIAL MAY BE USED AS NECESSARY WITH APPROVAL BY ENGINEER.

THE ENTIRE COST OF WORK REQUIRED TO PLACE THE EXCAVATED MATERIAL SHALL BE INCLUDED IN THE CONTRACT PRICE BID FOR CHANNEL SUBSTRATE MATERIAL.

THE ENTIRE COST OF WORK REQUIRED TO CONSTRUCT THE SILLS SHALL BE INCLUDED IN THE VARIOUS PAY ITEMS.

TOP OF LOW FLOW SILLS SHOULD MATCH STREAM BED ELEVATION IN LOW FLOW CHANNEL OF STREAM. (THALWEG)

DO NOT SET ELEVATION OF HIGH SILL ABOVE BANK FILL.

NUMBER OF SILLS DETERMINED BY THE ENGINEER.

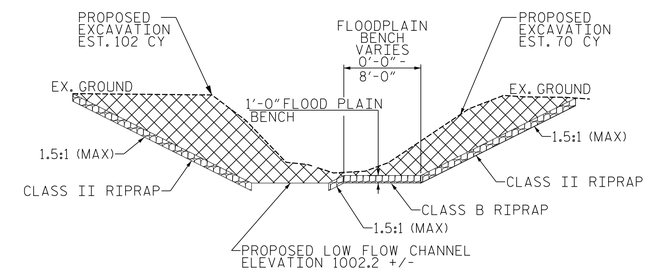

INLET CHANNEL
& FLOODPLAIN BENCH PROFILE
(LOOKING UPSTREAM)

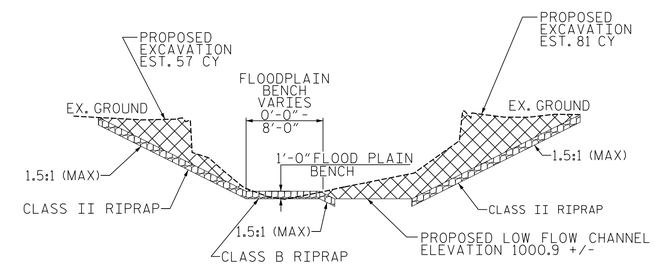

OUTLET CHANNEL
& FLOODPLAIN BENCH PROFILE
(LOOKING DOWNSTREAM)

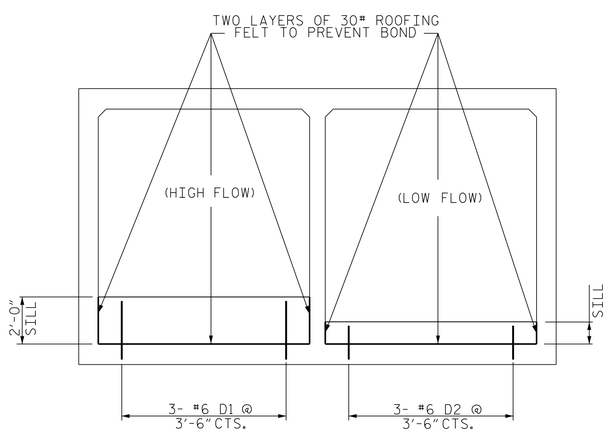

END ELEVATION
LOOKING DOWNSTREAM

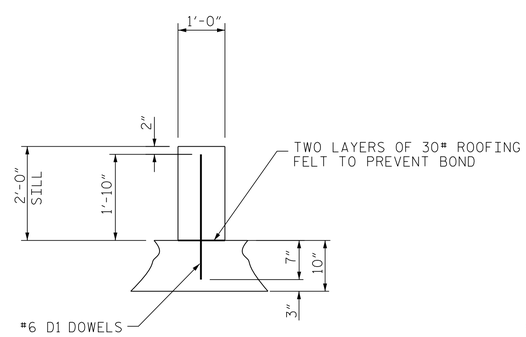

SECTION "A-A"
DOWELS MAY BE PUSHED INTO GREEN CONCRETE AFTER SLAB HAS BEEN FLOATED.

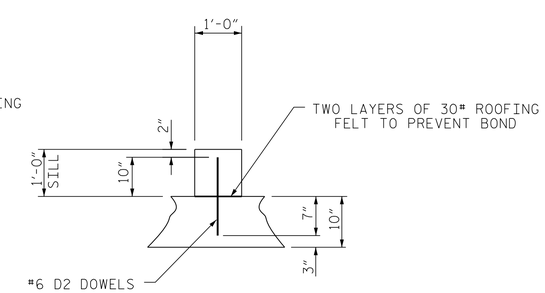

SECTION "B-B"
DOWELS MAY BE PUSHED INTO GREEN CONCRETE AFTER SLAB HAS BEEN FLOATED.

SILL DETAILS

DOCUMENT NOT CONSIDERED FINAL UNLESS ALL SIGNATURES COMPLETED

NORTH CAROLINA PROFESSIONAL SEAL 20777 ENGINEER HARDY L. WILLIS
DocuSigned by: Hardy Willis
CC287FCF02234E...
4/28/2017

V&M
Vaughn & Melton
Consulting Engineers
Asheville, North Carolina
828-253-2796
Charlotte, NC 704-357-0488
Boone, NC 828-355-9933
Tri-Cities, TN 423-467-8401
Knoxville, TN 865-546-5800
Spartanburg, SC 864-574-4775
Charleston, SC 843-974-5650
Middlesboro, KY 606-248-6600
Atlanta, GA 770-627-3509
Copyright © 2006 Vaughn & Melton, Inc. All Rights Reserved

PROJECT NO. 17BP.14.R.142
POLK COUNTY
STATION: 13+47.70 -L-
SHEET 7 OF 10

STATE OF NORTH CAROLINA
DEPARTMENT OF TRANSPORTATION
RALEIGH

DOUBLE 8 FT. X 8 FT. CONCRETE BOX CULVERT 105° SKEW

DRAWN BY: RWW	DATE: 3/2015	
CHECKED BY: HLW	DATE: 3/2015	
DES. EGR. OF RECORD: RTS	DATE: 3/2015	

REVISIONS						SHEET NO.
NO.	BY:	DATE:	NO.	BY:	DATE:	C-7
1			3			TOTAL SHEETS
2			4			10