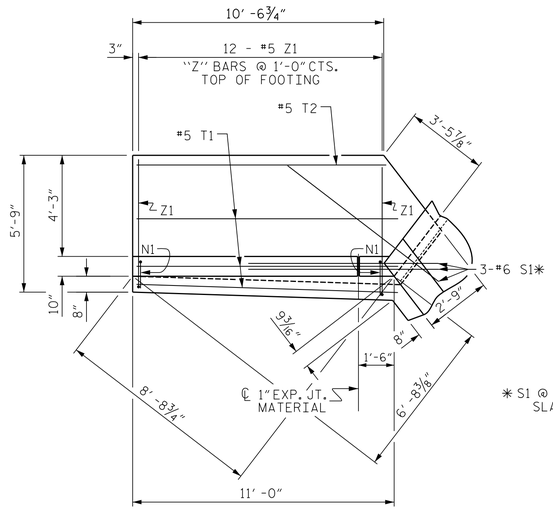

✱ S1 @ BOTTOM OF FLOOR SLAB & FOOTING

PLAN W2

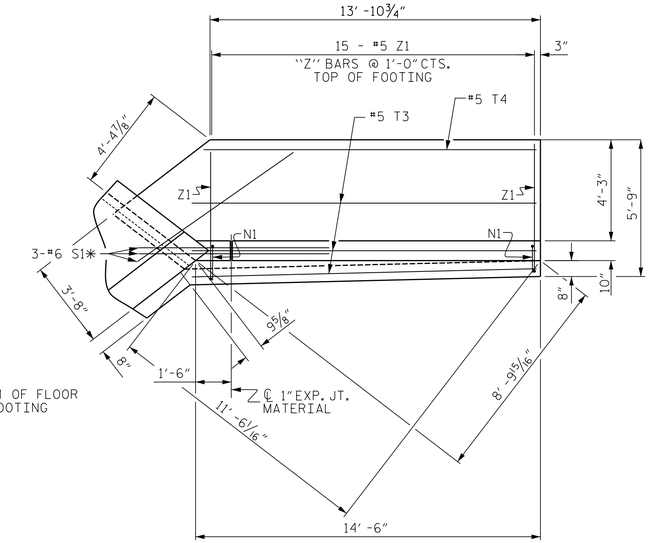

PLAN W1

BAR TYPES

ALL BAR DIMENSIONS ARE OUT TO OUT.

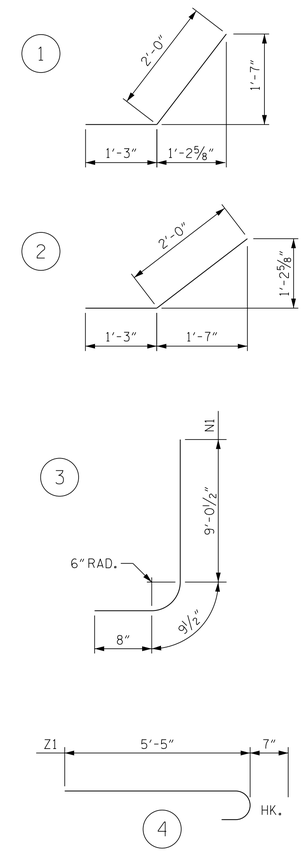

BILL OF MATERIAL

BAR	NO.	SIZE	TYPE	LENGTH	WEIGHT
H1	28	#4	STR	9'-1"	170
H2	28	#4	1	3'-3"	61
H3	28	#4	STR	12'-7"	235
H4	28	#4	2	3'-3"	61
N1	54	#5	3	10'-6"	591
S1	12	#6	STR	8'-0"	144
T1	6	#5	STR	11'-0"	69
T2	2	#5	STR	10'-6"	22
T3	6	#5	STR	14'-6"	91
T4	2	#5	STR	14'-0"	29
V1	54	#4	STR	8'-6"	307
Z1	54	#5	4	6'-0"	338

REINFORCING STEEL FOR 4 WINGS 2,118 LBS

CLASS A CONCRETE

4 WINGS	27.3	CY
2 HEADWALLS	1.8	CY
1 EDGE BEAM	.9	CY
2 END CURTAIN WALLS	2.1	CY
TOTAL	32.1	CY

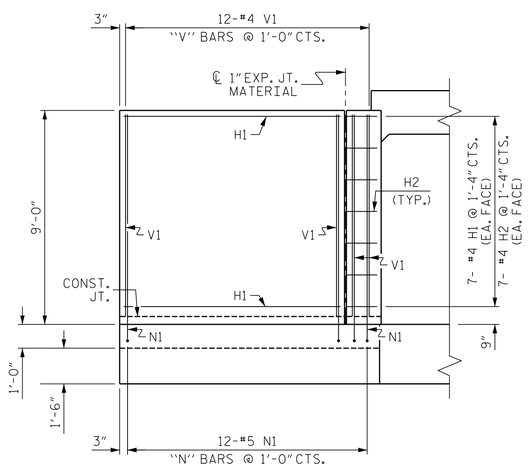

ELEVATION W2

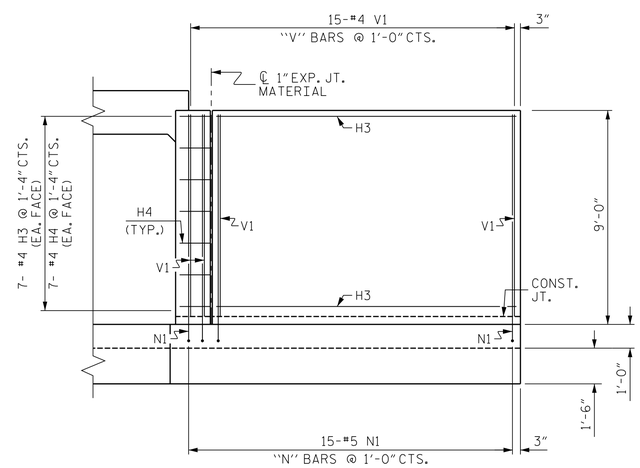

ELEVATION W1

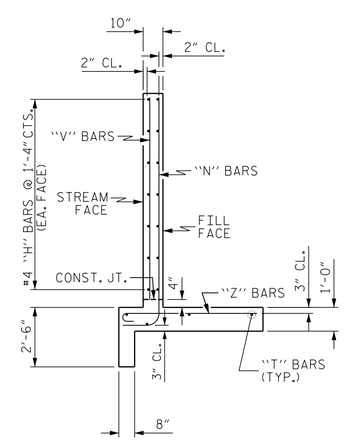

TYPICAL WING SECTION

NORTH CAROLINA PROFESSIONAL SEAL 20777 ENGINEER HARDY L. WILLIS
DocuSigned by: HardyWillis CC287FCF0223461... 4/28/2017

DOCUMENT NOT CONSIDERED FINAL UNLESS ALL SIGNATURES COMPLETED

PROJECT NO. 17BP.14.R.142

POLK COUNTY

STATION: 13+47.70 -L-

SHEET 9 OF 10

STATE OF NORTH CAROLINA
DEPARTMENT OF TRANSPORTATION
RALEIGH

WINGS FOR CONCRETE BOX CULVERT

H = 8'-0" SLOPE = 4:1

105° SKEW

V&M
Vaughn & Melton
Consulting Engineers
Asheville, North Carolina 828-253-2796
Charlotte, NC 704-357-0488
Boone, NC 828-355-9933
Tri-Cities, TN 423-467-8401
Knoxville, TN 865-546-5800
Spartanburg, SC 864-574-4775
Charleston, SC 843-974-5650
Middlesboro, KY 606-248-6600
Atlanta, GA 770-627-3509

Copyright © 2006 Vaughn & Melton, Inc. All Rights Reserved

DRAWN BY: RWW DATE: 3/2015
CHECKED BY: HLW DATE: 3/2015
DES. EGR. OF RECORD: RTS DATE: 3/2015

REVISIONS							
NO.	BY:	DATE:	NO.	BY:	DATE:	SHEET NO.	C-9
1			3			TOTAL SHEETS	10
2			4				

STD. NO. CW7508