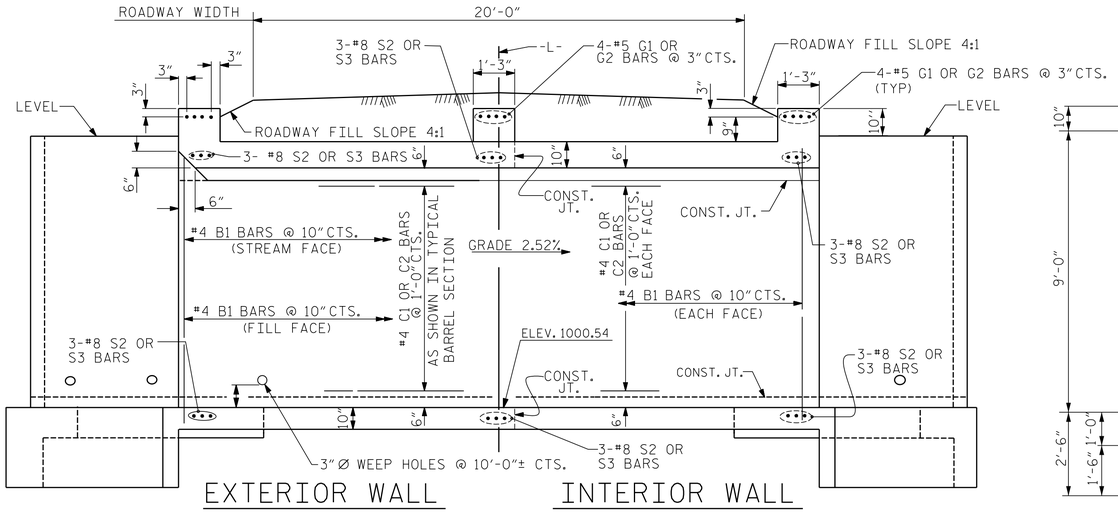

CULVERT SECTION NORMAL TO ROADWAY

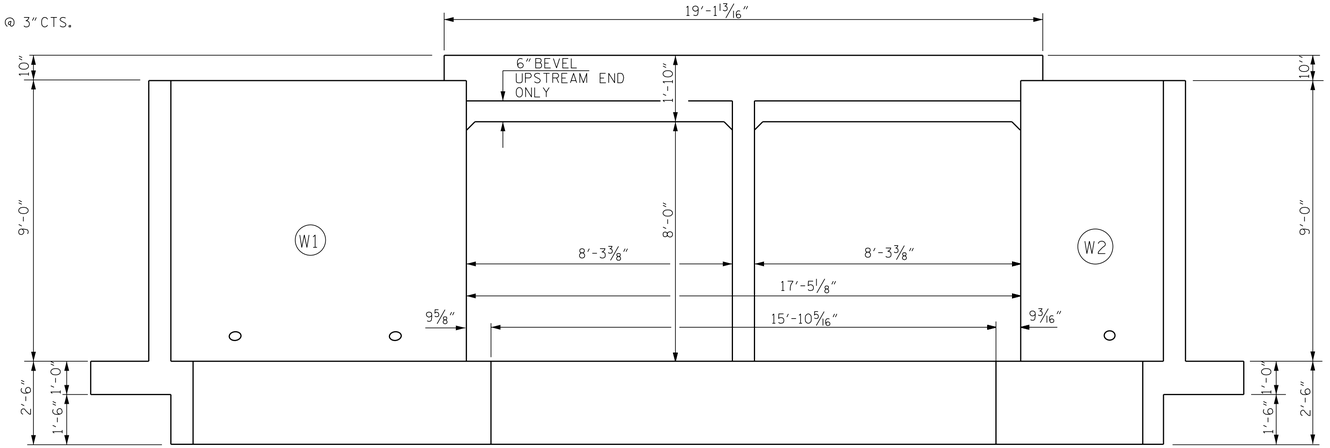

END ELEVATION NORMAL TO SKEW

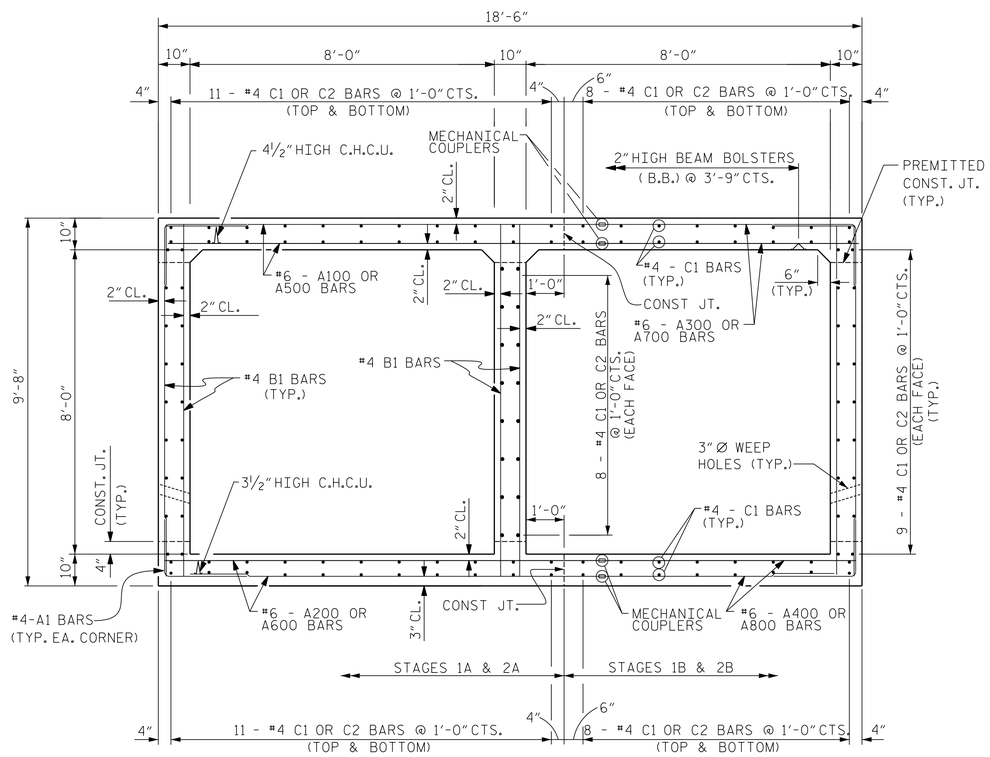

RIGHT ANGLE SECTION OF BARREL

THERE ARE 128 "C" BARS IN SECTION OF BARREL.

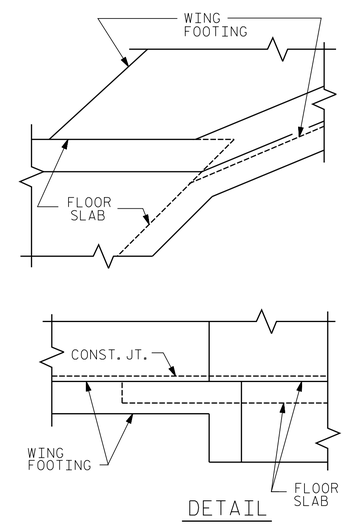

CONNECTION OF WING FOOTING AND FLOOR SLAB WHEN WING FOOTING IS THICKER THAN SLAB

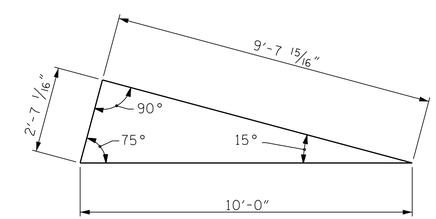

SKEW TRIANGLE

PROJECT NO. 17BP.14.R.142

POLK COUNTY

STATION: 13+47.70 -L-

SHEET 2 OF 10

STATE OF NORTH CAROLINA
DEPARTMENT OF TRANSPORTATION
RALEIGH

BARREL STANDARD

DOUBLE 8 FT. X 8 FT. CONCRETE BOX CULVERT 105° SKEW

DOCUMENT NOT CONSIDERED FINAL UNLESS ALL SIGNATURES COMPLETED

NORTH CAROLINA PROFESSIONAL SEAL 20777 ENGINEER HARDY L. WILLIS
DocuSigned by: Hardy Willis 4/28/2017
CC287FCF0223461...

REVISIONS						SHEET NO.
NO.	BY:	DATE:	NO.	BY:	DATE:	C-2
1			3			TOTAL SHEETS
2			4			10

STD. NO. CB222

ASSEMBLED BY : R.W.W.	DATE : MAR. 2015	SPECIAL	
CHECKED BY : H.L.W.	DATE : MAR. 2015		
DRAWN BY : W. BRYAN STANLEY II	DATE : NOV.1971	STANDARD	
CHECKED BY : JOEL A. JOHNSON	DATE : DEC.1971		

REVISED 11-19-99 BY M.M. CHECKED BY R.W.W.
REVISED 8-28-92 BY E.L.R. CHECKED BY C.R.P.
REDRAWN 11-90 BY A.R.B. CHECKED BY C.R.K.